Rectifiers (AC → DC)

Single Phase Rectifier (Pure Resistive Load):

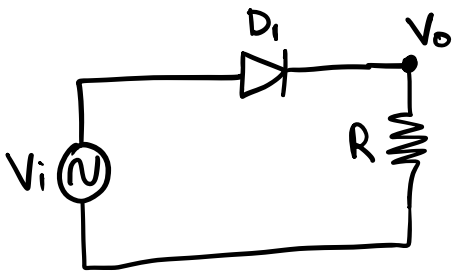

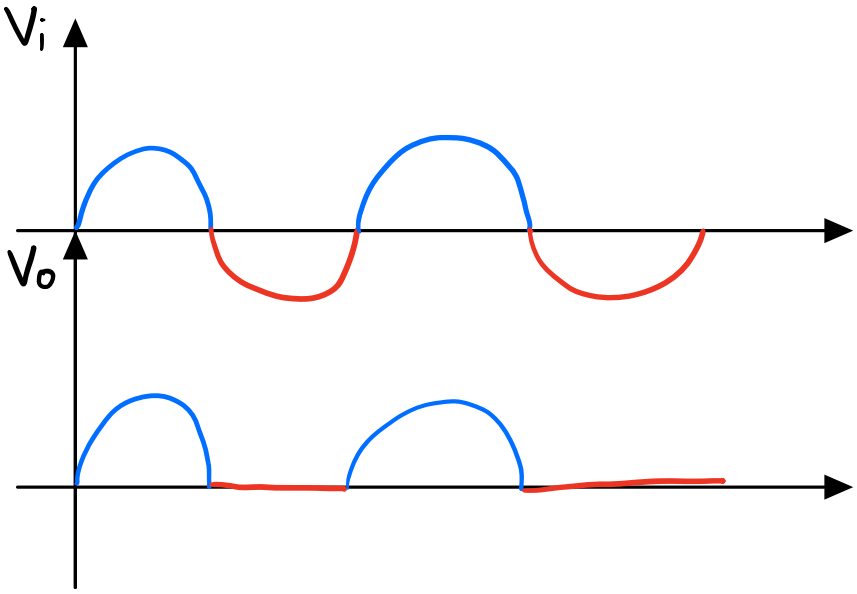

Single Phase Rectifier W/Capacitor:

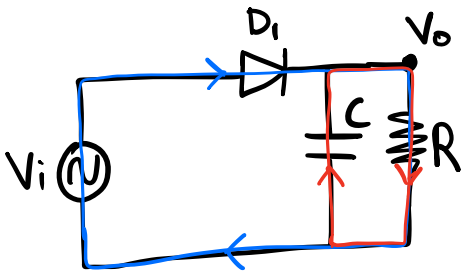

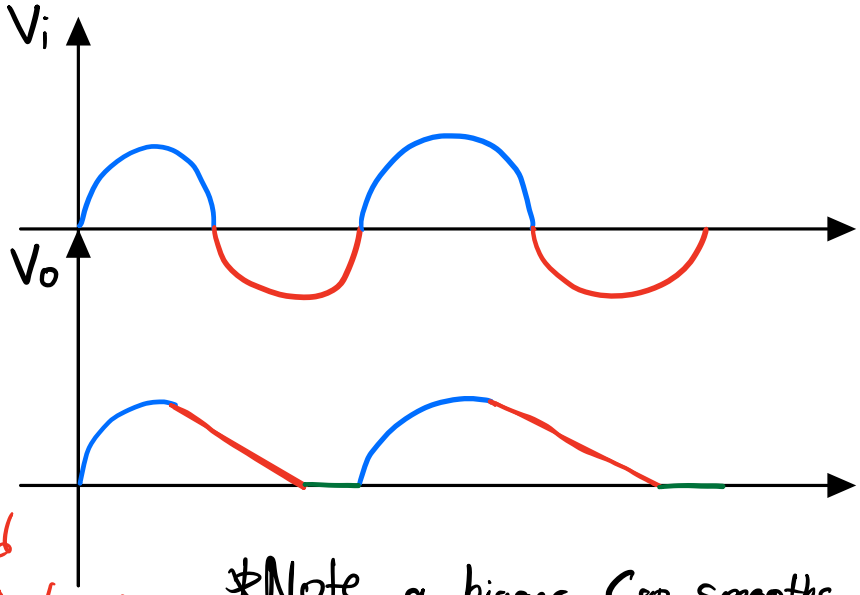

Regions of Operation:

1. Diode is Forward Biased
2. Diode is Reverse Biased
   RC Circuit, Capacitor Discharging
3. Capacitor is fully discharged
   Diode is Reverse Biased. No output

*Note, a bigger Cap smooths this out more (Less of a slope)
— Won't have a zero voltage region

Full ~~Bridge~~ Wave Rectifier:

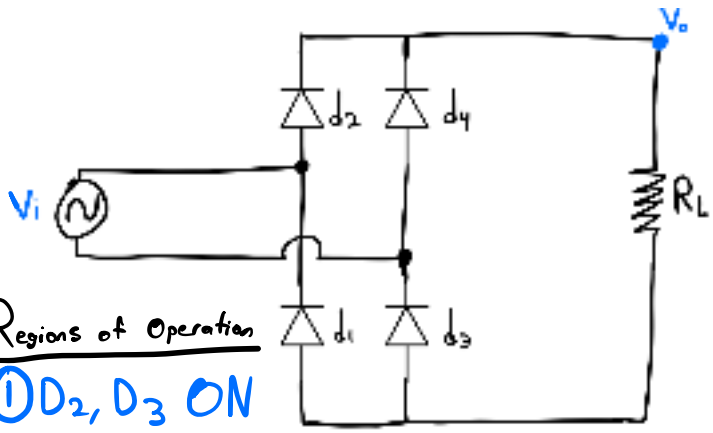

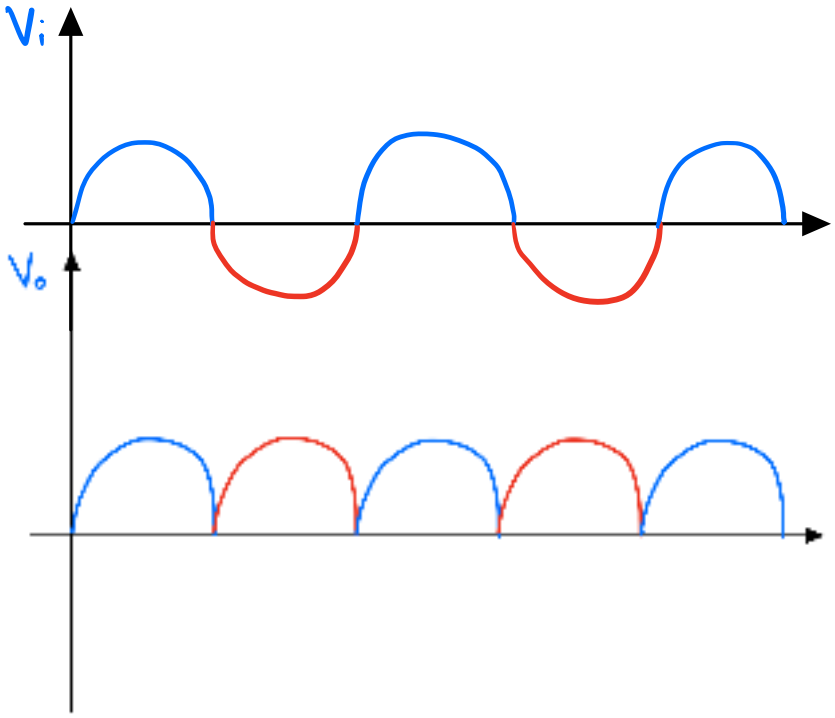

Regions of Operation

① D_2, D_3 ON

② D_4, D_1 ON

Full ~~Bridge~~ Wave w/Capacitor:

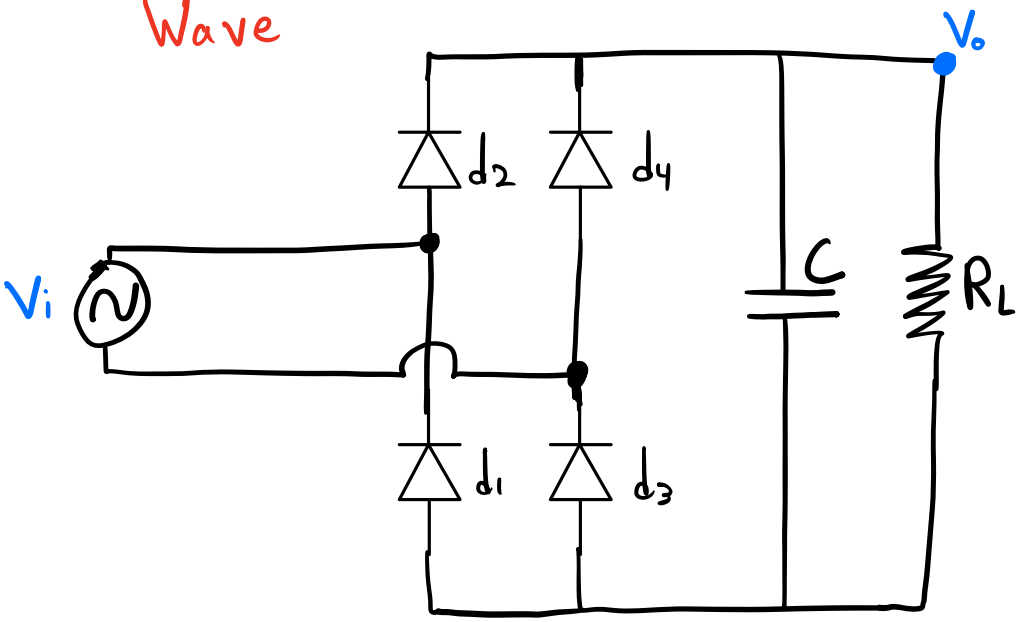

Regions of Operation

① D_2, D_3 ON Capacitor charging

② All Diodes off RC

③ D_4, D_1 ON Capacitor charging
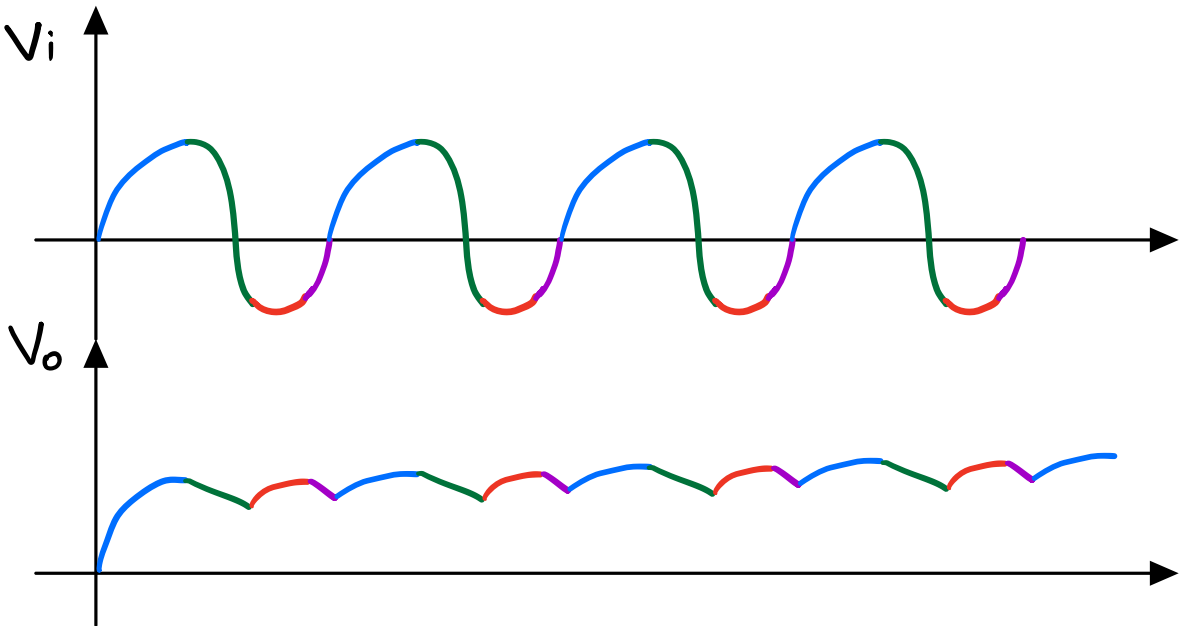
④ All Diodes off RC